OPERATOR'S MANUAL
“W” Series Premium Pallet Trucks

JET EQUIPMENT & TOOLS, INC.
A WMH Company
www.jettools.com

P.O. BOX 1349
Auburn, WA 98071-1349
e-mail jet@jettools.com

253-351-6000
Fax 800-274-6840
M-140075 2/01

Important Information

1-YEAR **LIMITED WARRANTY**	**JET offers a one-year limited warranty on this product**

REPLACEMENT PARTS

Replacement parts for this tool are available directly form JET Equipment & Tools.
To place an order, call 1-800-274-6848. Please have the following information ready:

1. Visa, MasterCard, or Discover Card number
2. Expiration date
3. Part number listed within this manual
4. Shipping address other than a Post Office box.

REPLACEMENT PART WARRANTY

JET Equipment & Tools makes every effort to assure that parts meet high quality and durability standards and warrants to the original retail consumer/purchaser of our parts that each such part(s) to be free from defects in materials and workmanship for a period of thirty (30) days from the date of purchase.

PROOF OF PURCHASE

Please retain your dated sales receipt as proof of purchase to validate the warranty period.

LIMITED TOOL AND EQUIPMENT WARRANTY

JET makes every effort to assure that its products meet high quality and durability standards and warrants to the original retail consumer/purchaser of our products that each product be free from defects in materials and workmanship as follows: 1 YEAR LIMITED WARRANTY ON THIS JET PRODUCT. Warranty does not apply to defects due directly or indirectly to misuse, abuse, negligence or accidents, repairs or alterations outside our facilities or to a lack of maintenance. JET LIMITS ALL IMPLIED WARRANTIES TO THE PERIOD SPECIFIED ABOVE FROM THE DATE THE PRODUCT WAS PURCHASED AT RETAIL. EXCEPT AS STATED HEREIN, ANY IMPLIED WARRANTIES OR MECHANTABILITY AND FITNESS ARE EXCLUDED. SOME STATES DO NOT ALLOW LIMITATIONS ON HOW LONG THE IMPLIED WARRANTY LASTS, SO THE ABOVE LIMITATION MAY NOT APPLY TO YOU. JET SHALL IN NO EVENT BE LIABLE FOR DEATH, INJURIES TO PERSONS OR PROPERY OR FOR INCIDENTAL, CONTINGENT, SPECIAL OR CONSEQUENTIAL DAMAGES ARISING FROM THE USE OF OUR PRODUCTS. SOME STATES DO NOT ALLOW THE EXCLUSION OR LIMITATION OF INCIDENTAL OR CONSEQUENTIAL DAMAGES, SO THE ABOVE LIMITATION OR EXCLUSION MAY NOT APPLY TO YOU. To take advantage of this warranty, the product or part must be returned for examination, postage prepaid, to an authorized service station designated by our Auburn office. Proof of purchase date and an explanation of the complaint must accompany the merchandise. If our inspection discloses a defect, JET will either repair or replace the product or refund the purchase price, if we cannot readily and quickly provide a repair or replacement, if you are willing to accept such refund. JET will return repaired product or replacement at JET's expense, but if it is determined there is no defect, or that the defect resulted from causes not within the scope of JET's warranty, then the user must bear the cost of storing and returning the product. This warranty gives you specific legal rights, and you have other rights, which vary, from state to state.

JET Equipment & Tools • P.O. Box 1349, Auburn, WA 98071-1349 • (253) 351-6000

⚠ WARNING

- **Read and understand the entire operator's manual before using the pallet truck.**
- **Do not place hands or feet under the pallet truck at any time.**
- **Do not operate a loaded pallet truck on ramps or inclines.**
- **Do not tip load pallet truck forks. This may cause damage to the forks and personal injury if the rear of the pallet truck suddenly "pops up".**
- **Never leave a loaded pallet truck unattended in the raised position. Always lower load to the floor.**
- **Do not load pallet truck beyond its rated capacity.**
- **Secure load before transporting.**
- **To prevent accidental tipping, make sure load is centered on the forks.**
- **Do not move a loaded pallet truck by other than manual force.**
- **Failure to comply with these warnings may result in personal injury and/or property damage.**

The specifications in this manual are given as general information and are not binding. JET Equipment & Tools reserves the right to effect, at any time and without prior notice, changes or alterations to parts, fittings, and accessory equipment deemed necessary for any reason whatsoever.

Table of Contents

Warranty 2
Warnings.....3
Table of Contents 4
Assembly 5
Specifications 6
Operation 7
Lubrication.....7
O-Ring & Seal Kit Replacement.....8
Valve Cartridge & O-Ring Replacement.....8
Cleaning Release Valve 8
Adjusting Up-Down Cam.....8
Troubleshooting.....9
Parts Breakdown 10-12
Parts List 13-14
Test Certificate 15

Introduction

Congratulations on your purchase of a JET “W” Series Premium Pallet Truck.

To better understand the proper use and safe operation of this pallet truck, please take a few minutes to carefully read and follow the instructions contained in this manual. When finished reading and understanding the manual, please file in a safe and convenient location for the life of the pallet truck.

You will notice several important features about your JET Premium Pallet Truck. It features a 2-7/8” lowered height, rounded fork tips and nylon entry/exit rollers to provide easy entry and exit of pallets.

A large, easy-to-use ergonomic handle with a 200° turning radius allows maximum maneuverability. The articulated steer wheel axle helps maintain floor contact on uneven surfaces.

The cast iron pump design features top-of-the-stroke and overload by-pass systems, hardened and chromed ram and piston, and a single point valve service for easy replacement. A special lowering valve allows you to control the rate of descent and prevent “shock” loads.

Your JET Premium Pallet Truck is designed and built to give you years of trouble-free service with minimum maintenance and service attention.

Record Your Purchase Information Here

Purchased from _____ Date _____

Model Number _____ Stock Number _____

Serial Number _____ Date in Service _____

Assembly

Note: Individual pallet trucks are assembled and ready to use. Pallet trucks purchased in crate quantities (6 units to a crate) require some assembly. Match the “letter” label on the handle assembly to the “letter” label on the frame, prior to assembly.

Tools Required for Assembly:

- Hammer
- 3mm Hex Wrench
- Pliers

To attach handle assembly to the frame:

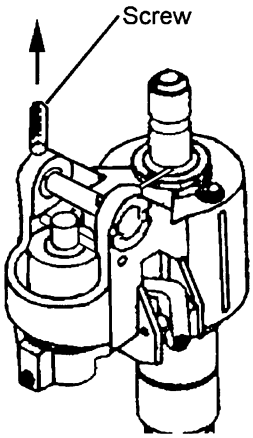

1. Unscrew the hex socket screw.

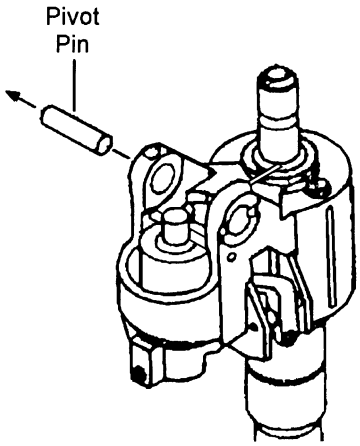

2. Tap out pivot pin.

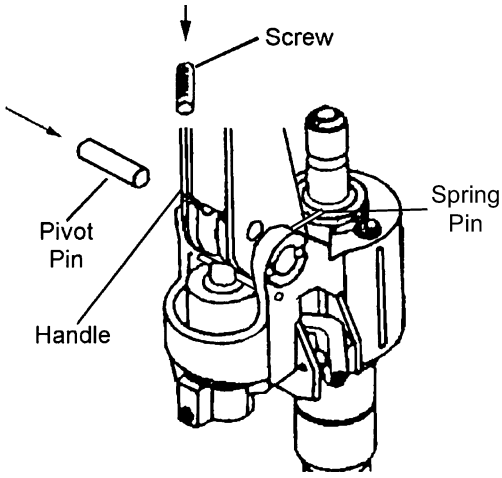

3. Align the holes in the handle with the holes in the pump body. Tap the pivot pin into the handle and pump body.
4. Using pliers, turn the pivot pin until spring pin hole’s line up.
5. Using a hammer, tap the spring pin into the pump body and pivot pin. Reinstall the hex socket screw.

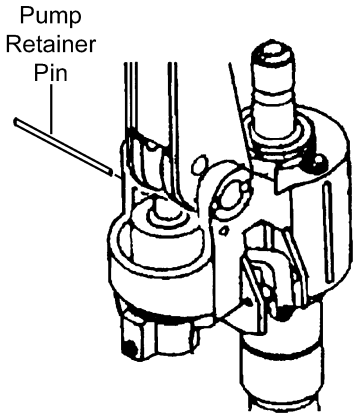

6. Tap out pump retainer pin.

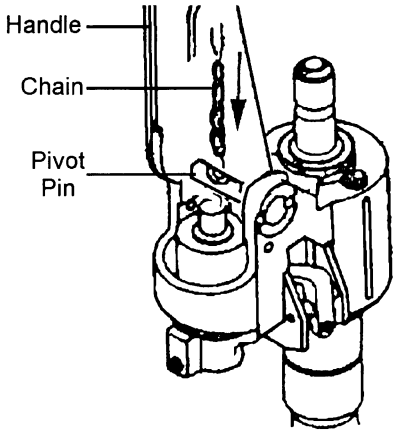

7. Feed the chain through the hole in the pivot pin.

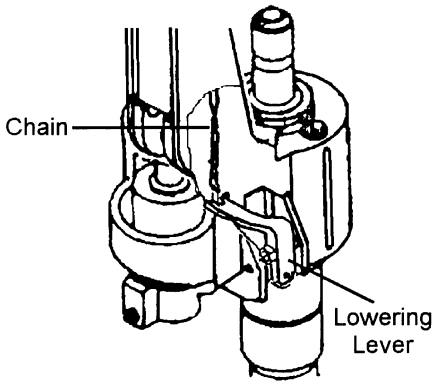

8. Place the bottom of the head through the lowering valve.

Specifications

Model	Stock #	W1	W2	L1	L2	H1	H2	A (dxw)	B (dxw)	C	Net Wt.
PT-2036W	140070	20.5”	6.25”	36”	16.5”	7-3/4”	2-7/8”	7”x2”	2-7/8”x3-11/16”	47”	170
PT-2042W	140071	20.5”	6.25”	42”	16.5”	7-3/4”	2-7/8”	7”x2”	2-7/8”x3-11/16”	47”	179
PT-2048W	140072	20.5”	6.25”	48”	16.5”	7-3/4”	2-7/8”	7”x2”	2-7/8”x3-11/16”	47”	187
PT-2736W	140073	27”	6.25”	36”	16.5”	7-3/4”	2-7/8”	7”x2”	2-7/8”x3-11/16”	47”	183
PT-2742W	140074	27”	6.25”	42”	16.5”	7-3/4”	2-7/8”	7”x2”	2-7/8”x3-11/16”	47”	192
PT-2748W	140075	27”	6.25”	48”	16.5”	7-3/4”	2-7/8”	7”x2”	2-7/8”x3-11/16”	47”	200

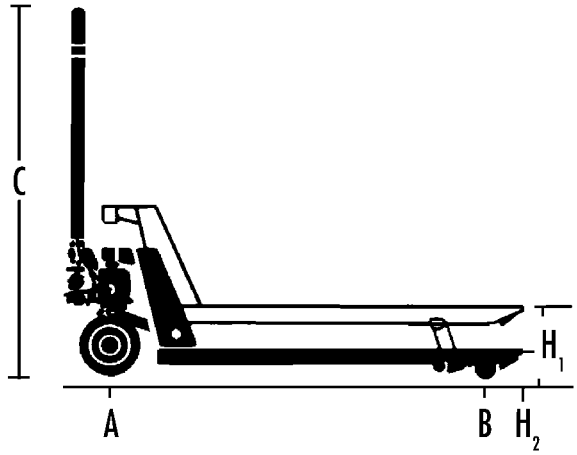

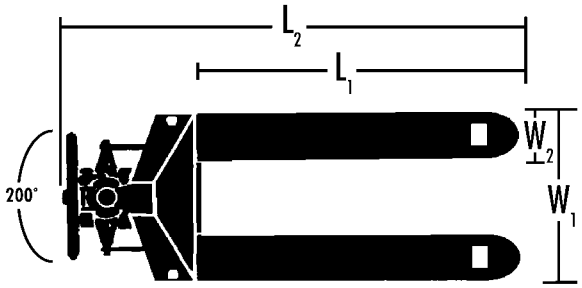

Operation

To raise the forks, push lever down and pump the handle to the desired height.

To lower forks, pull lever up. The lever is spring loaded and will return to the neutral position.

To freely move the handle, set the lever in the center neutral position.

To lift a load:

1. Lower forks to lowest position.
2. Insert forks under load or into pallet.
3. Push the lever down.
4. Move handle up and down until forks reach desired height.

To move a load:

1. Place lever in center neutral position.
2. Pull or push to desired location.

To lower a load:

1. Pull lever up.
2. Pull forks away from load.

Lubrication

Check the oil level annually by removing #65 screw. When changing or adding oil, fill the tank through #65 screw hole, to 80% capacity with hydraulic jack oil approximately 2” deep in pump housing. See pump housing breakdown.

There are five oil points located on the truck. One is located on the bearing base #97, one on pressure plate #5, and the others on the load wheel frame #22. Grease the five points on a semi-annual basis.

Lightly oil all moving parts.

O-Ring and Seal Replacement for Piston and Plunger Piston

Note: Refer to Pump Breakdown

1. Raise the pallet truck by pumping handle.
2. Remove the C-clip #69B. This will free the pump and handle assembly from the pallet truck

3. Remove screw (#83) and empty the oil into a suitable container. Pump handle until all oil has drained.
4. Pull out ram piston or plunger piston.
5. Remove pump cap (#66) for Piston
6. Remove all O-Rings & Seals.
7. Insert new O-Ring or Seal one at a time making sure to replace with the same size that was removed.
8. Reassemble.
9. Refill oil to correct level through #65. 80% capacity or approximately 2 inches deep in reservoir.

O-Ring and Seal Replacement for Valve Cartridge

1. Remove screw (#83) and empty the oil into a suitable container. Pump handle until all oil has drained.
2. Tap out spring pin (#79).
3. Remove the lowering lever (#76).
4. Unscrew the valve cartridge (#80).
5. Remove all O-Rings & Seals.
6. Insert new O-Ring or Seal one at a time making sure to replace with the same size that was removed.
7. Assemble the valve cartridge and lowering lever.
8. Refill oil to correct level #65. 80% capacity or approximately 2 inches deep in reservoir.

Cleaning the Release Valve
(Bleeding the Pump)

Over time the release valve assembly may become clogged with debris. To clean the release valve:

1. Pump handle quickly raising pallet truck to full extent. While continuing pump action, pull lever to down position.
2. When forks reach total down position, valve is flushed. Repeat if necessary.

Adjusting Up-Down Cam

1. Place lever in the neutral position.
2. Loosen #78 hex nut.
3. Adjust #77 hex socket screw while pumping the handle.
4. The cam is properly adjusted when pumping the handle in the neutral position causes no movement.

Troubleshooting

Possible problems could arise in the operation of your hydraulic pallet truck. Their probable causes(s) and corrective action(s) follow:

Condition	Probable Causes	Corrective Action
Hydraulic unit does not lift	Oil low in tank	Make sure there is no oil leakage from valve and add oil
	Steel ball not seated in hydraulic unit	Place the lever in the down position and pump the handle repeatedly
	Worn U-packing in ram cylinder	Consult authorized repair station
Once lifted truck lowers by itself	Steel ball not seated in hydraulic unit	See “Cleaning Release Valve” on page 8
	Worn U-packing in ram cylinder	See “Cleaning Release Valve” on page 8
	Release valve not seated properly	See “Cleaning Release Valve” on page 8
	Release valve not adjusted properly	Reload truck within load capacity and adjust valve by pressure adjustment screw
	Oil leakage from each valve	Tighten plug of each valve
Fork does not lower	Cam broken	Replace cam chain
	Up-down cam nut out of adjustment	Refer to “Adjusting Up-Down Cam” on page 8
	Broken fork rods and linkage	Replace broken parts
Lever does not set at Up-down	Cam nut out of adjustment	Refer to “Adjusting Up-Down Cam” on page 8

Parts List for the PT-2748W Premium Pallet Truck

Index No.	Part No.	Description	Size	Qty.
1	PT2748W-01	Handle Assembly Complete		1
2	PT2748W-02	Spring Pin	8x50mm	1
3	PT2748W-03	Bearing		1
4	PT2748W-04	Spring Pin	5x35mm	2
5	PT2748W-05	Pressure Plate		1
6	PT2748W-06	C-clip		1
7	PT2748W-07	Wheel Shaft		1
8	PT2748W-08	C-clip		2
9	PT2748W-09	Washer		2
10	PT2748W-10	Steering Wheel Complete w/Bearings		2
	BB-6240VV	Steer Wheel Bearing		4
11	PT2748W-11	C-clip		2
12	PT2748W-12	Steer Wheel Hub Cap		2
13	PT2748W-13	Arm Pin		2
13A	PT2748W-13A	Bushing		2
14	PT2748W-14	Lifting Link For 27” Wide Frame		1
	PT2048W-14	Lifting Link For 20.5” Wide Frame		1
15	PT2748W-15	Bushing		2
16	PT2748W-04	Spring Pin	5x35mm	2
16A	PT2748W-16A	Bushing		2
17	PT2748W-17	Push Rod For 48” Forks		2
	PT2742W-17	Push Rod For 42” Forks		2
	PT2736W-17	Push Rod For 36” Forks		2
18	PT2748W-18	Spring Pin	5x30mm	4
19	PT2748W-19	Roller		4
20	PT2748W-18	Spring Pin	5x30mm	2
21	PT2748W-21	Shaft		2
21A	PT2748W-21A	Bushing		4
22	PT2748W-22	Load Wheel Frame		2
22A	PT2748A-055B	Grease Fitting		4
23	PT2748W-18	Spring Pin	5x30mm	2
26	PT2748W-26	Shaft		2
27	PT2748W-27	Shaft		2
28	PT2748W-28	Washer		4
29	PT2748W-29	Load Wheel Complete w/Bearings		2
	BB-6204VV	Load Wheel Bearing		4
30	PT2748W-30	Load Wheel Dust Cover		4
31	PT2748W-31	Dust Cover Lock Ring		4
33	PT2748W-33	C-clip		1
34	PT2748W-34	Long Shaft For 27” Wide Frame		1
	PT2048W-34	Long Shaft For 20.5” Wide Frame		1
35	N/A	Fork Frame		1
36	PT2748W-36	C-clip		2
37	PT2748W-37	Entry Roller		2
38	PT2748W-38	Shaft		2
39	PT2748W-39	Stop Roller		1
40	PT2748W-40	Spring Pin	4x22	1
41	PT2748W-41	Handle		1
42	PT2748W-42	Spring Pin	6x30	1
43	PT2748W-40	Spring Pin	4x22	1
44	PT2748W-44	Lowering Lever		1

Index No.	Part No.	Description	Size	Qty.
45	PT2748W-45	Lowering Linkage		1
46	PT2748W-46	Chain		1
47	PT2748W-47	Anchor chain		1
48	PT2748W-48	Pressure Roller		1
49	PT2748W-49	Pressure Roller Shaft		1
50	PT2748W-50	Pivot Pin		1
51	PT2748W-51	Spring Pin	4x30	2
52	PT2748W-52	Spring For Lowering Lever		1
53	PT2748W-53	Bushing		2
53A	PT2748W-53A	Plunger Piston		1
54	PT2748W-54	Spring Cap		1
55	PT2748W-55	Plunger Spring		1
56	PT2748W-56	Plunger Cylinder		1
57	PT2748W-94	O-ring & Seal Kit*	DH18	1
58	PT2748W-94	O-ring & Seal Kit*	DH18	1
59	PT2748W-59	Spring Pin		1
60	PT2748W-60	Pump Body		1
61	PT2748W-61	Washer		1
62	PT2748W-62	Screw Plug		1
63	PT2748W-94	O-ring & Seal Kit*	32x3.5	1
64	PT2748W-94	O-ring & Seal Kit*	UN32	1
65	PT2748W-65	Screw	M6x8	3
66	PT2748W-66	Pump Cap		1
67	PT2748W-94	O-ring & Seal Kit*	P62	1
68	SB-3/4	Ball	3/4	1
69	PT2748W-69	Piston		1
69A	PT2748W-69A	Washer		1
69B	PT2748W-69B	C-clip		1
70	PT2748W-94	O-ring & Seal Kit*	P31	1
71	PT2748W-94	O-ring & Seal Kit*	UN32	1
72	PT2048W-72	Pin		1
73	PT2748W-94	O-ring & Seal Kit*	P15	1
74	PT2748W-94	O-ring & Seal Kit*	P17	1
75	PT2748W-94	O-ring & Seal Kit*	P22	1
76	PT2748W-76	Lowering Lever		1
77	PT2048W-77	Threaded Pin		1
78	PT2748W-78	Hex Nut		1
79	PT2748W-79	Tension Pin Handle		1
80	PT2748W-80	Valve Cartridge 1		1
80A	PT2748W-80A	Valve Cartridge 2		1
81	PT2748W-94	O-ring & Seal Kit*	11x2.4	1
82	PT2748W-82	Washer		1
83	PT2748W-83	Bolt		1
84	PT2748W-84	Overload Valve Assembly** (#84-91)		1
85	PT2748W-84	Steel Ball**		1
86	PT2748W-84	Spreader Spring Bracket**		1
87	PT2748W-84	Spreader Spring**		1
88	PT2748W-84	Supporting Bracket**		1
89	PT2748W-84	Spreader Spring Bolt**		1
90	PT2748W-84	Washer**		1
91	PT2748W-84	Fixed Screw**		1
	PT2748W-92	Pump Handle Wheel Assembly		1
93	PT2748W-93	Pump Assembly Complete		1
	PT2748W-94	O-ring & Seal Kit* (57,58,63,67,70,71,73-75,81)		1
	PT2748W-95	Label Kit		1
96	PT2748A-055B	Grease Fitting		1

97	PT2748W-97	Bearing Base		1
98	PT2748W-98	Set Screw	M8x10	1
99	PT2748W-99	Dust Boot		1

*Available only in the O-ring & Seal kit - PT2748W-94
**Available only in the Overload Valve Assembly - PT2748W-84

Parts Breakdown

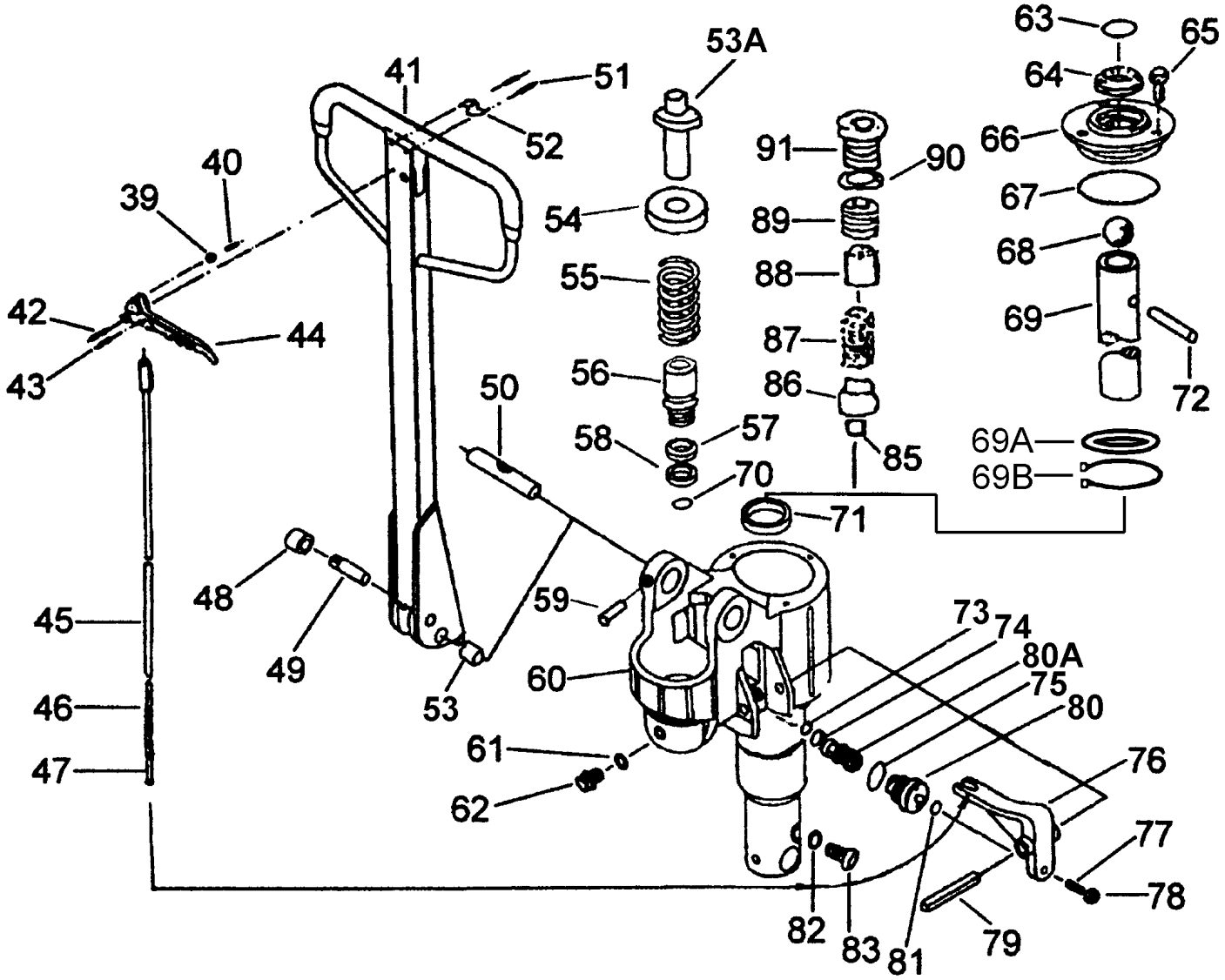

Parts Breakdown

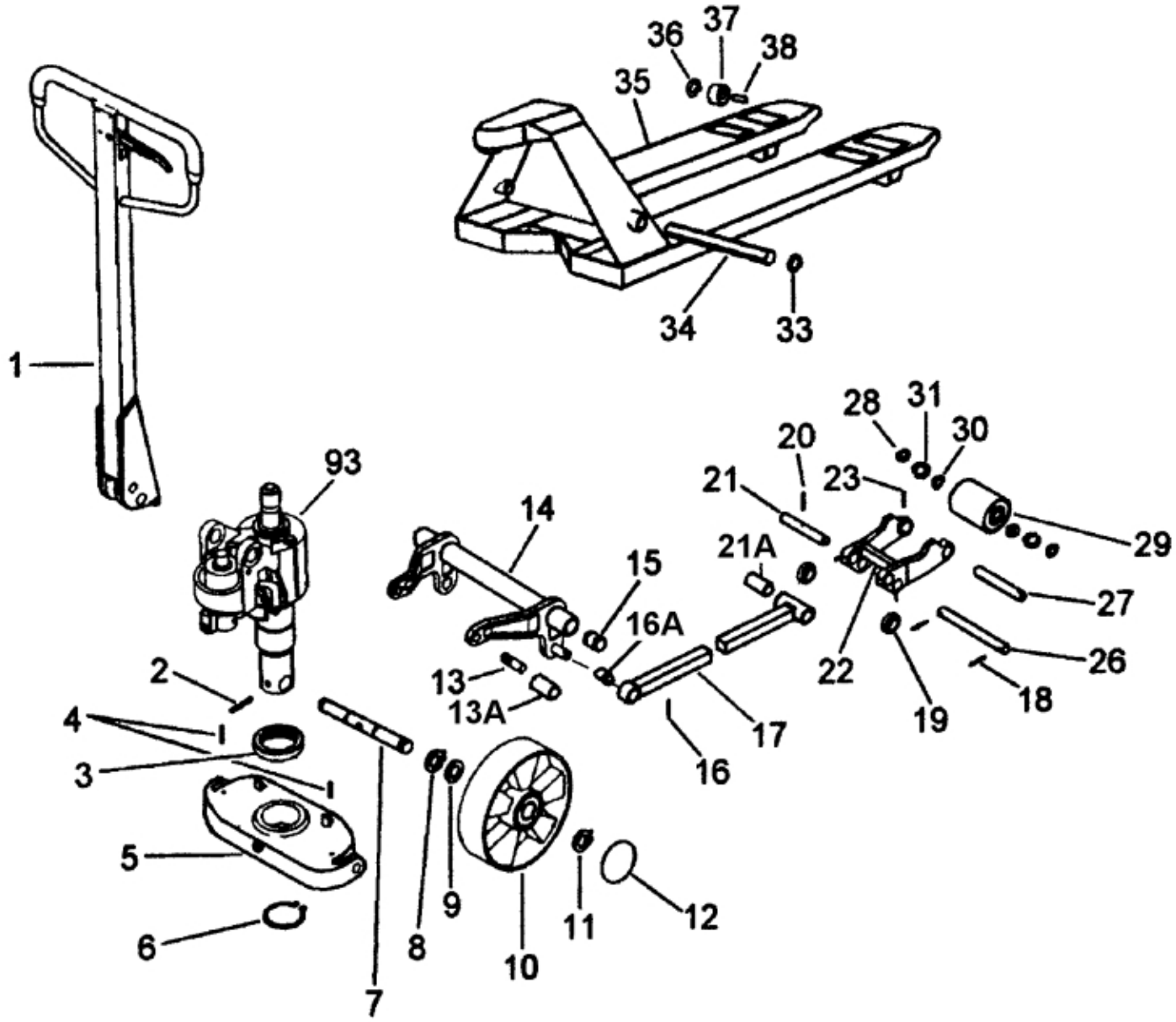

Pump Breakdown

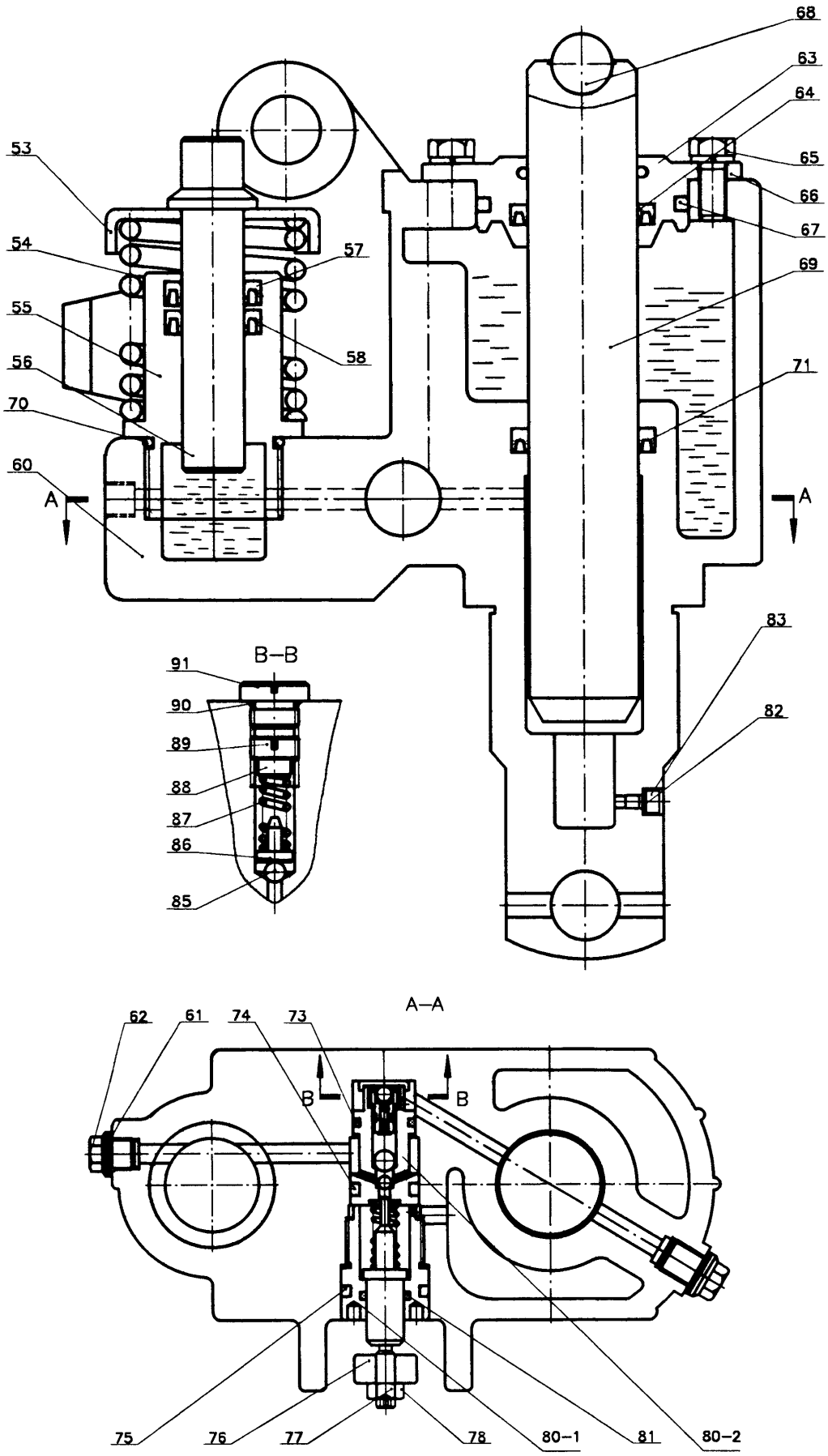

TEST CERTIFICATE

COMMODITY	Pallet Truck
MODEL	"W" Series Premium
SERIAL NO.	
CAPACITY	6,000 lbs.
TEST LOAD	lbs.
DATE OF INSPECTION	
JUDGEMENT	PASSED
INSPECTOR	

JET EQUIPMENT & TOOLS, INC.
A WMH Company
www.jettools.com

2415 West Valley Highway N
P.O. Box 1349
Auburn, WA 98071-1349

Fax: 800-274-6840
Phone: 253-351-6000
e-mail: jet@jettools.com